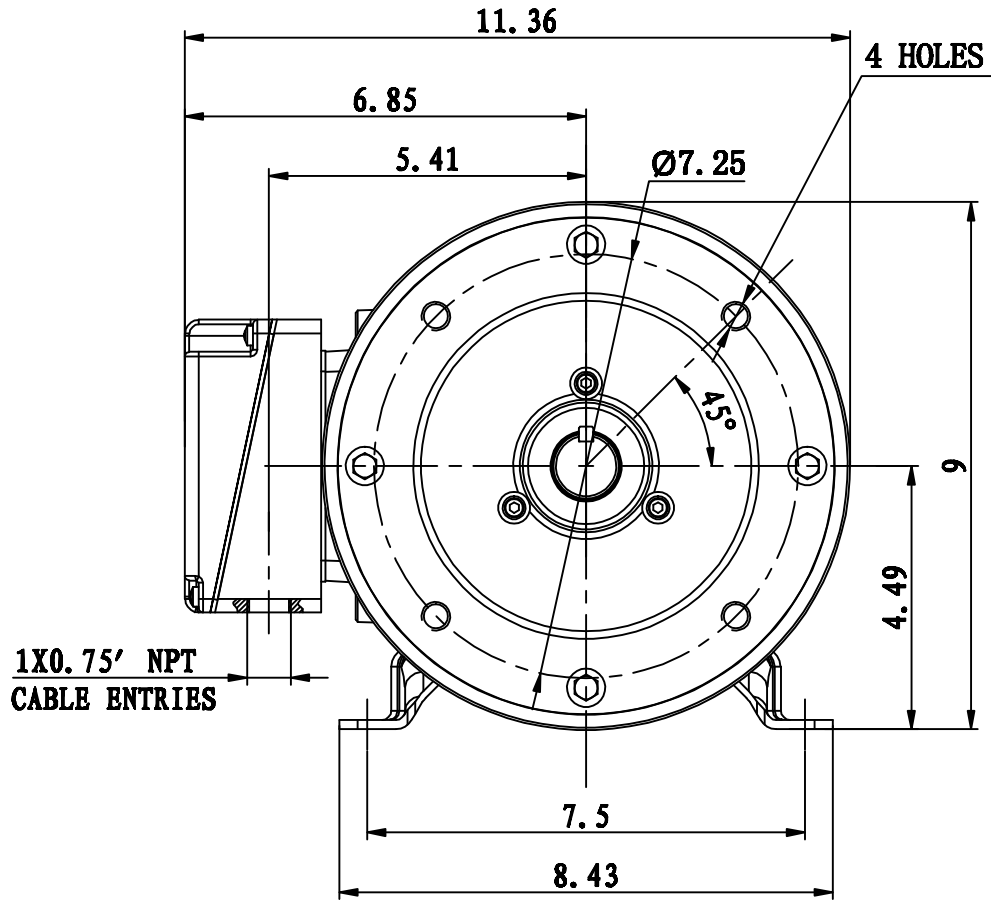

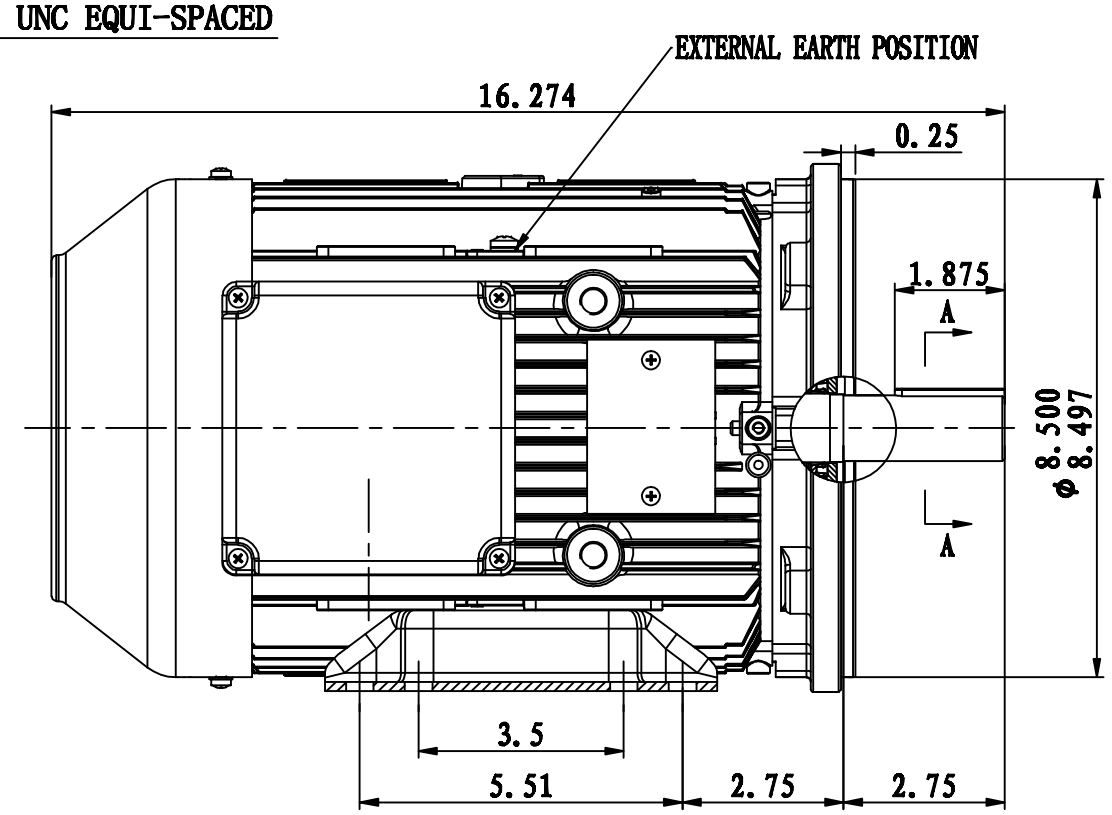

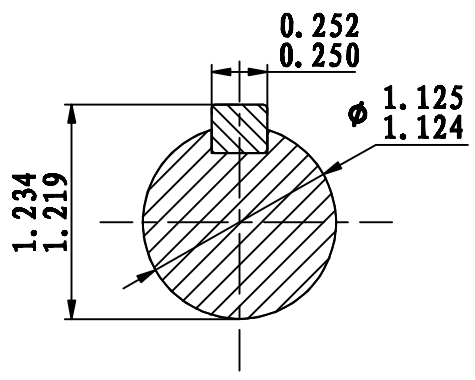

A-A
1:1

STANDARD TERMINAL BOX POSITION IS 9 O'CLOCK AS SHOWN.
CONDUIT ENTRIES:- TERMINAL BOX CAN BE ROTATED AT 90° INTERVALS

WP-DA184TSH-VF4

1:3